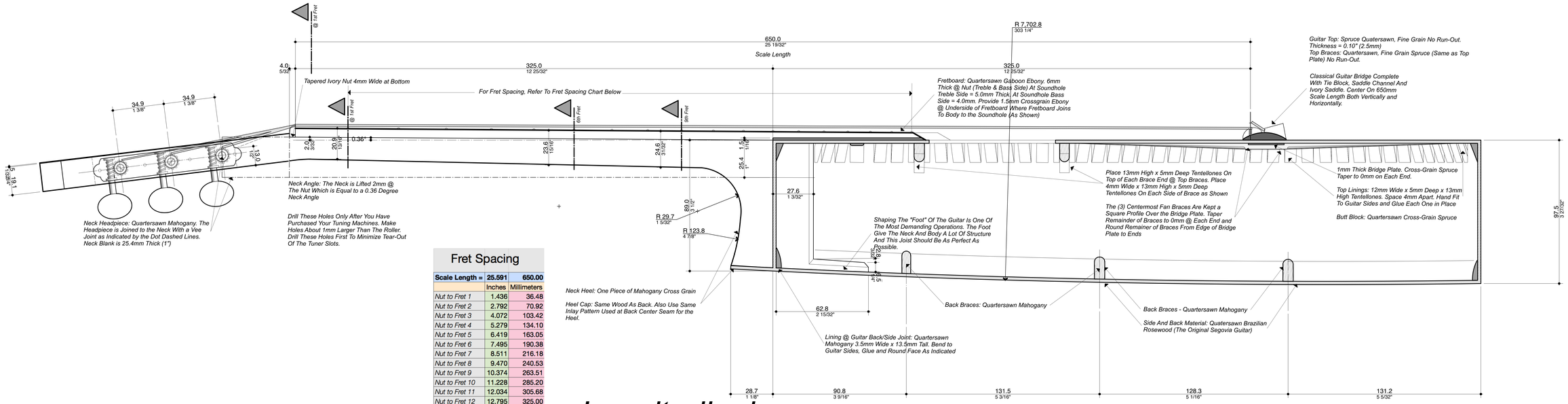


# Longitudinal Section AA

Note: Most Luthiers Make A Template From Either Wood Or Plastic With The Neck Profile, Heal Shape And Interior Neck Block And Foot Profile - All In One Template. Make Another Copy Of This Plan To Make Your Own. Just Use Spray Adhesive To Attach The Pattern And Cut It Out With Your Band Sand. Cut A Little Big (Away From The Line) And Finish Sand With A Spindle Sander Right Down To The Line

## Fret Spacing

| Scale Length = | 25.591 | 650.00 |
|---|---|---|
| | Inches | Millimeters |
| Nut to Fret 1 | 1.436 | 36.48 |
| Nut to Fret 2 | 2.792 | 70.92 |
| Nut to Fret 3 | 4.072 | 103.42 |
| Nut to Fret 4 | 5.279 | 134.10 |
| Nut to Fret 5 | 6.419 | 163.05 |
| Nut to Fret 6 | 7.495 | 190.38 |
| Nut to Fret 7 | 8.511 | 216.18 |
| Nut to Fret 8 | 9.470 | 240.53 |
| Nut to Fret 9 | 10.374 | 263.51 |
| Nut to Fret 10 | 11.228 | 285.20 |
| Nut to Fret 11 | 12.034 | 305.68 |
| Nut to Fret 12 | 12.795 | 325.00 |
| Nut to Fret 13 | 13.513 | 343.24 |
| Nut to Fret 14 | 14.191 | 360.46 |
| Nut to Fret 15 | 14.831 | 376.71 |
| Nut to Fret 16 | 15.435 | 392.05 |
| Nut to Fret 17 | 16.005 | 406.53 |
| Nut to Fret 18 | 16.543 | 420.19 |
| Nut to Fret 19 | 17.051 | 433.09 |
| Nut to Fret 20 | 17.530 | 445.26 |
| Nut to Fret 21 | 17.982 | 456.76 |
| Nut to Fret 22 | 18.409 | 467.60 |
| Nut to Fret 23 | 18.813 | 477.84 |
| Nut to Fret 24 | 19.193 | 487.50 |

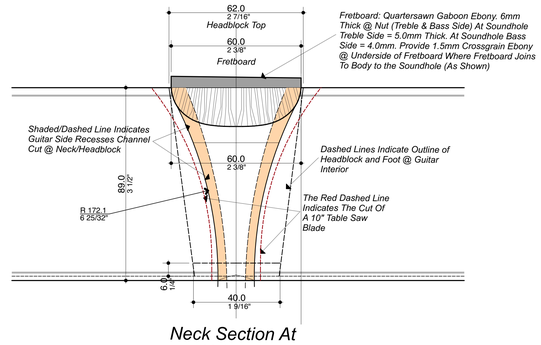


Neck Section At 12th Fret

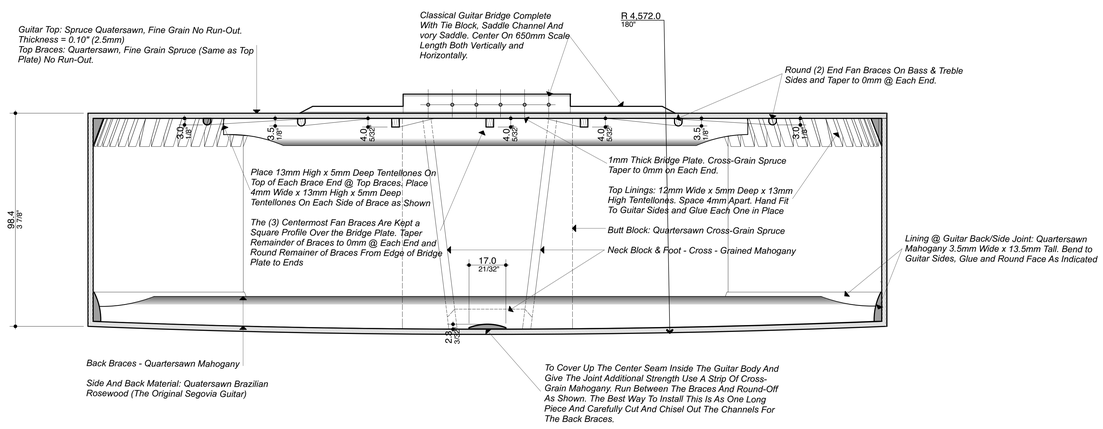


# Lateral Section BB

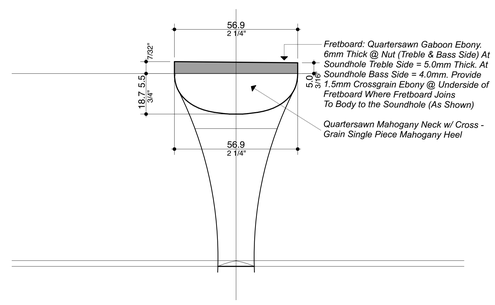


Neck Section At 7th Fret

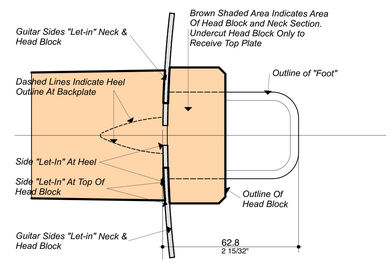


Top of Head Block Looking Down

Note For Detailed Guitar & Uke Construction Instructions Refer To Our Book "Guitar & Ukulele Construction Handbook @ http://shopglss.com

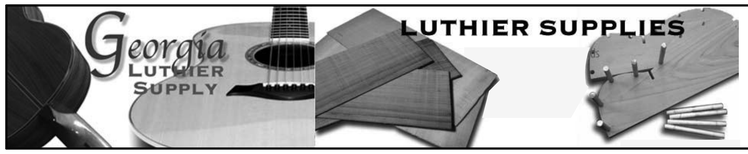


This Drawing or Drawings Are To Used For One Use Only And Not Reproduced For Any Other Purpose Than Construction Of This Particular Instrument, and a One Time Reproduction Only is Allowed

Reproduction, Distribution or Sales For Any Other Use Is Strictly Prohibited And Falls Under U.S Copyright Laws For David VerBurg AIA © 2017

This Sheet Size Is Metric A0 Size Overall Size is 1189mm x 841mm With 15mm Borders On All Sides. For USA Customers Print On Architectural "E" (36" x 48") Without Resizing For 1:1 Printout.

Georgia Luthier Supply

# 1937 Hauser Classical Guitar Plan

Date: Jan. 15, 2017

Revisions:

Unless Noted Otherwise, These Plans Are Drawn to Full Scale. They Are Labeled in mm and Fractional Inches

1937hauserplan_2

02